STL128DN

High voltage fast-switching NPN power transistor

Features

- High voltage capability
- Low spread of dynamic parameters
- Very high switching speed
- Large RBSOA
- Integrated antiparallel collector-emitter diode

Applications

- Electronic ballast for fluorescent lighting
- Flyback and forward single transistor low power converters

Description

The device is manufactured using high voltage multi epitaxial planar technology for high switching speeds and medium voltage capability. It uses a cellular emitter structure with planar edge termination to enhance switching speeds while maintaining the wide RBSOA. The device is designed for use in lighting applications and low cost switch-mode power supplies.

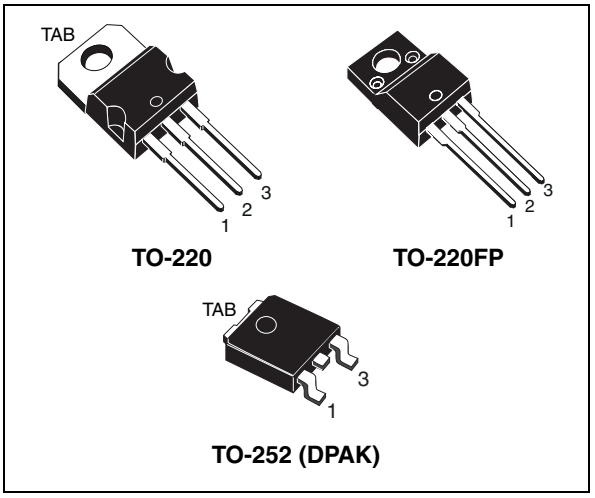

Figure 1. Internal schematic diagram

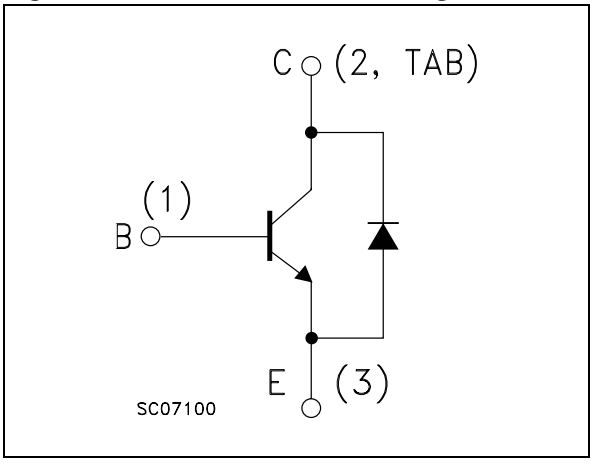

Table 1. Device summary

Order codes	Marking	Packages	Packaging
STL128DN	L128DN	TO-220	Tube
STL128DNFP	L128DNFP	TO-220FP	Tube
STLD128DNT4	LD128DN	DPAK	Tape and reel

Content

1 Electrical ratings 3

2 Electrical characteristics 4

2.1 Electrical characteristics (curves) 5

3 Test circuit 7

4 Package mechanical data 8

5 Revision history 13

1 Electrical ratings

Table 2. Absolute maximum ratings

Symbol	Parameter	Value	Unit
V_{CES}	Collector-emitter voltage (V_{BE} = 0)	700	V
V_{CEO}	Collector-emitter voltage (I_B = 0)	400	V
V_{EBO}	Base-emitter voltage (I_C = 0, I_B = 2 A, t_P < 10 µs)	$V_{(BR)EBO}$	V
I_C	Collector current	4	A
I_{CM}	Collector peak current (t_P < 5 ms)	8	A
I_B	Base current	2	A
I_{BM}	Base peak current (t_P < 5 ms)	4	A
P_{TOT}	Total dissipation at T_c = 25 °C for TO-220	60	W
	Total dissipation at T_c = 25 °C for TO-220FP	28	W
	Total dissipation at T_c = 25 °C for DPAK	20	W
T_{stg}	Storage temperature	-65 to 150	°C
T_J	Max. operating junction temperature	150	°C

Table 3. Thermal data

Symbol	Parameter	TO-220	TO-220FP	DPAK	Unit
R_{thJC}	Thermal resistance junction-case max	2.08	4.46	6.25	°C/W

2 Electrical characteristics

T_{case} = 25 °C unless otherwise specified

Table 4. Electrical characteristics

Symbol	Parameter	Test conditions	Min.	Typ.	Max.	Unit
I_{CES}	Collector cut-off current (V_{BE} = 0)	V_{CE} = 700 V V_{CE} = 700 V T_c = 125 °C			100 500	µA µA
I_{CEO}	Collector cut-off current (I_B = 0)	V_{CE} = 400 V			250	µA
$V_{(BR)EBO}$	Emitter-base breakdown voltage (I_C = 0)	I_E = 10 mA	9		18	V
$V_{CEO(sus)}$(1)	Collector-emitter sustaining voltage (I_B = 0)	I_C = 10 mA	400			V
$V_{CE(sat)}$(1)	Collector-emitter saturation voltage	I_C = 1 A I_B = 0.2 A I_C = 2 A I_B = 0.4 A			0.5 1	V V
$V_{BE(sat)}$(1)	Base-emitter saturation voltage	I_C = 1 A I_B = 0.2 A I_C = 2 A I_B = 0.4 A			1.2 1.3	V V
h_{FE}(1)	DC current gain	I_C = 10 mA V_{CE} = 5 V I_C = 2 A V_{CE} = 5 V	10 8		 24	
V_F	Diode forward voltage	I_F = 1 A			2.5	V
 t_s t_f	Resistive load Storage time Fall time	 I_C = 1 A I_{B1} = - I_{B2} = 0.2 A V_{CC} = 125 V t_p = 20 µs			 4.5 0.4	 µs µs

1. Pulse test: pulse duration ≤ 300 µs, duty cycle ≤ 2 %.

2.1 Electrical characteristics (curves)

Figure 2. Safe operating area for TO-220

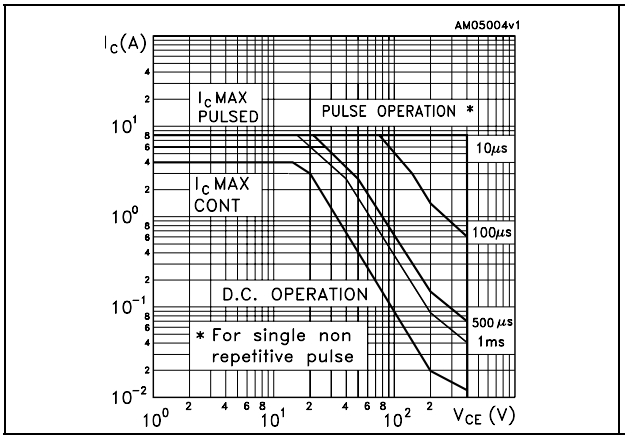

Figure 3. Safe operating area for TO-220FP

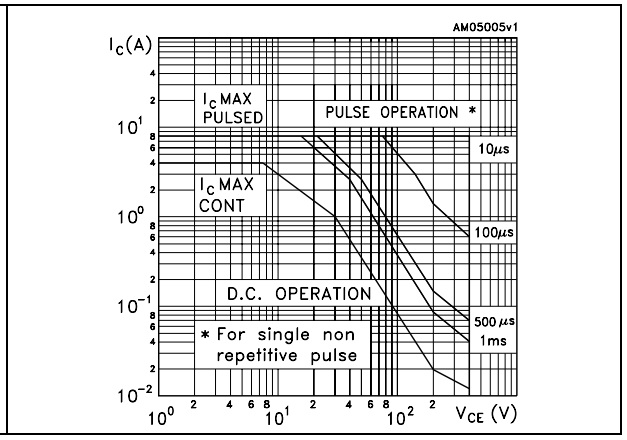

Figure 4. Safe operating area for DPAK

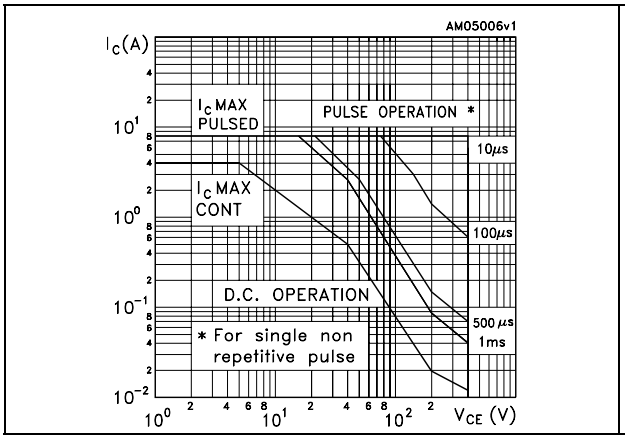

Figure 5. Derating curve

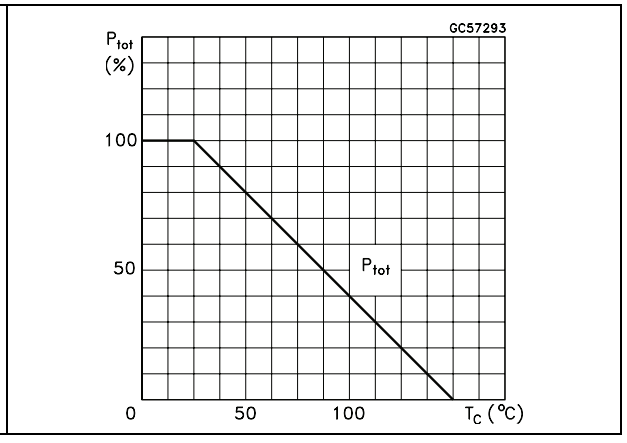

Figure 6. DC current gain (V_{CE} = 1 V)

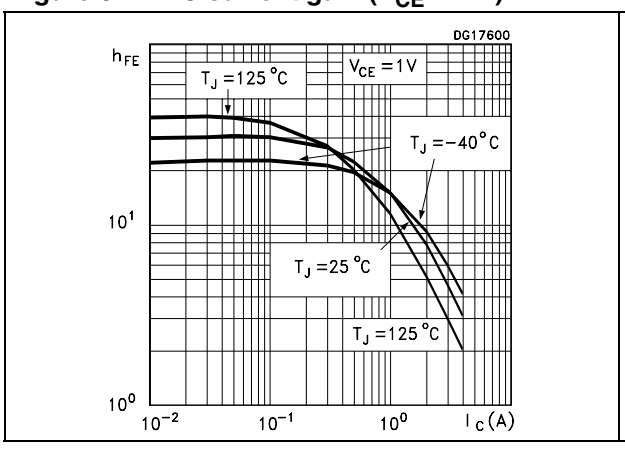

Figure 7. DC current gain (V_{CE} = 5 V)

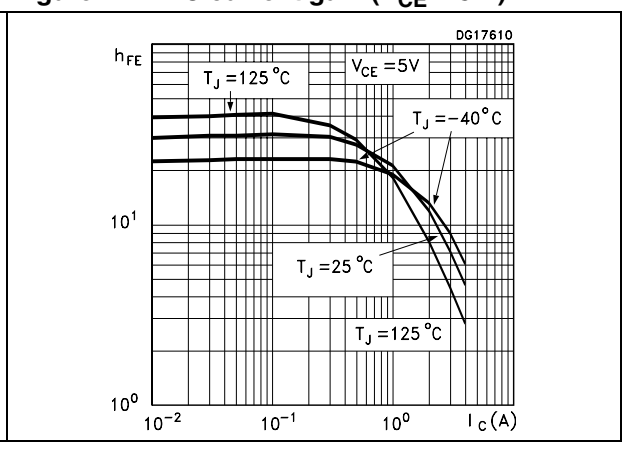

Figure 8. Collector-emitter saturation voltage

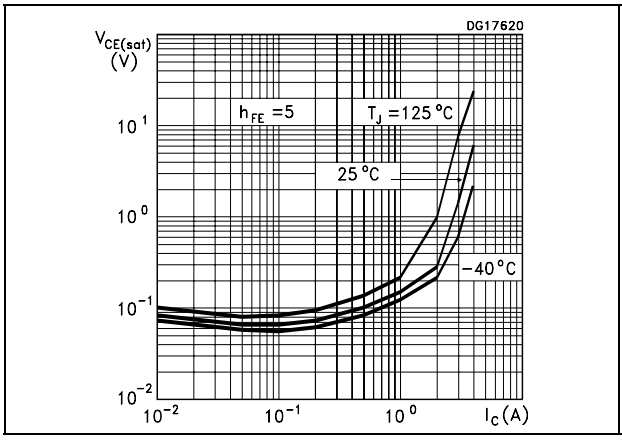

Figure 9. Base-emitter saturation voltage

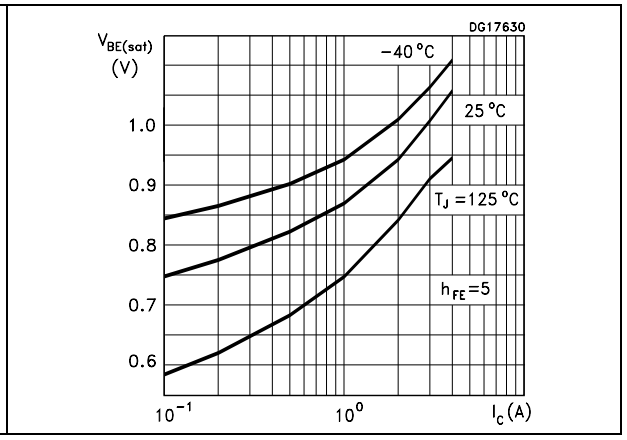

Figure 10. Freewheel diode forward voltage

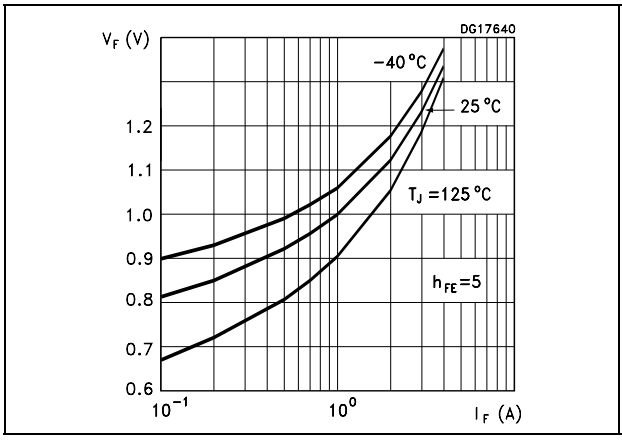

Figure 11. Resistive load switching time

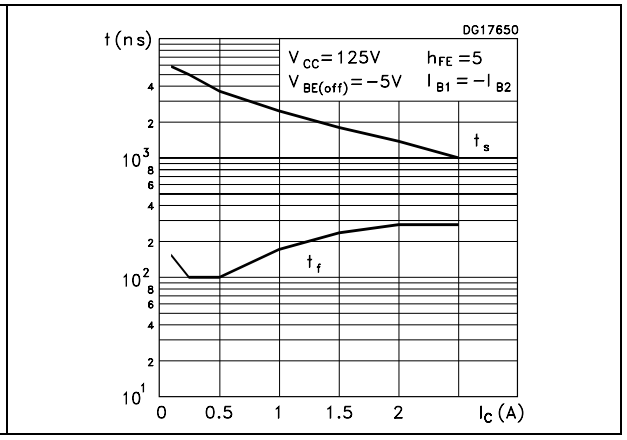

Figure 12. Reverse biased safe operating area

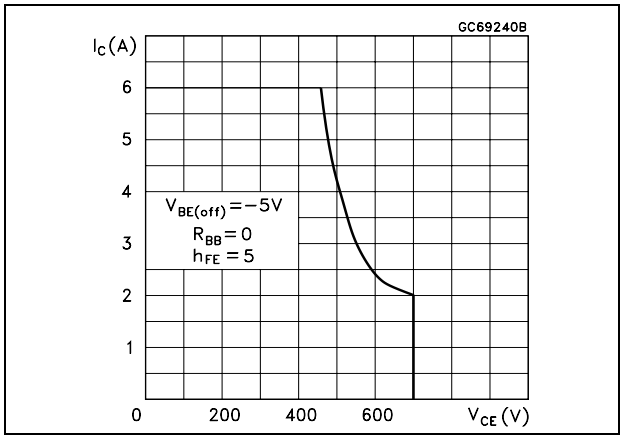

3 Test circuit

Figure 13. Resistive load switching test circuit

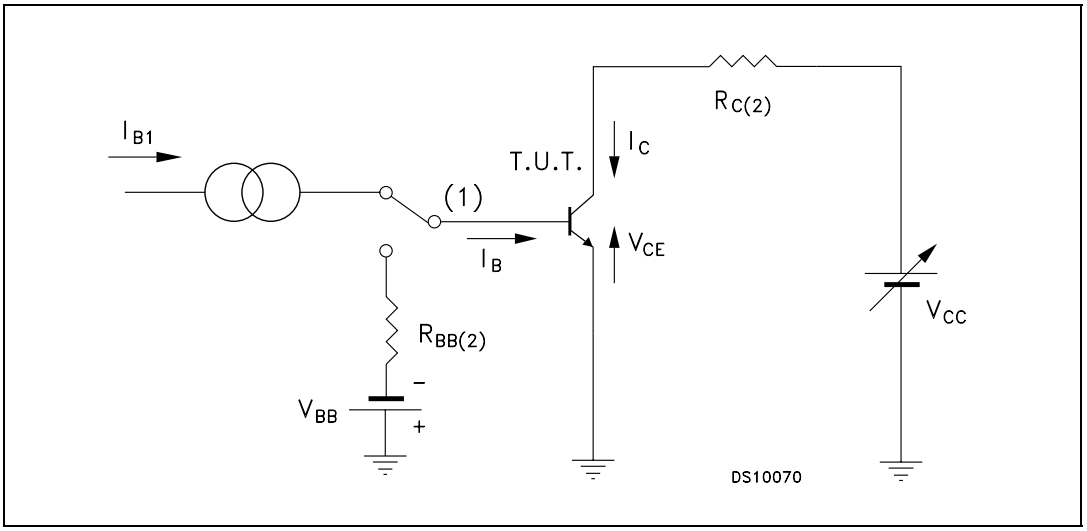

1. Fast electronic switch
2. Non-inductive resistor

4 Package mechanical data

In order to meet environmental requirements, ST offers these devices in different grades of ECOPACK® packages, depending on their level of environmental compliance. ECOPACK® specifications, grade definitions and product status are available at: *www.st.com*. ECOPACK® is an ST trademark.

TO-220 type A mechanical data

Dim	mm		
	Min	Typ	Max
A	4.40		4.60
b	0.61		0.88
b1	1.14		1.70
c	0.48		0.70
D	15.25		15.75
D1		1.27	
E	10		10.40
e	2.40		2.70
e1	4.95		5.15
F	1.23		1.32
H1	6.20		6.60
J1	2.40		2.72
L	13		14
L1	3.50		3.93
L20		16.40	
L30		28.90	
∅P	3.75		3.85
Q	2.65		2.95

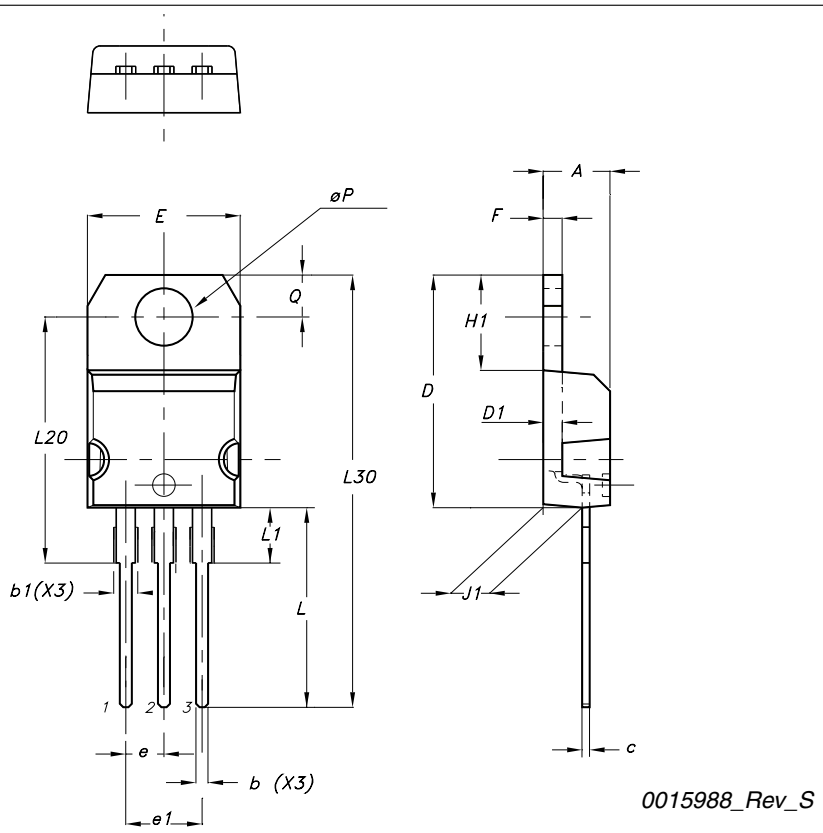

TO-220 type E mechanical data

Dim	mm		
	Min	Typ	Max
A	4.47		4.67
b	0.70		0.91
b1	1.17		1.37
c	0.31		0.53
D	14.60		15.70
E	9.96		10.36
e		2.54	
e1	4.98	5.08	5.18
F	1.17		1.37
H1	6.10		6.80
J1	2.52		2.82
L	12.70		13.80
L1	3.20		3.96
L20	15.21		16.77
øP	3.73		3.94
Q	2.59		2.89

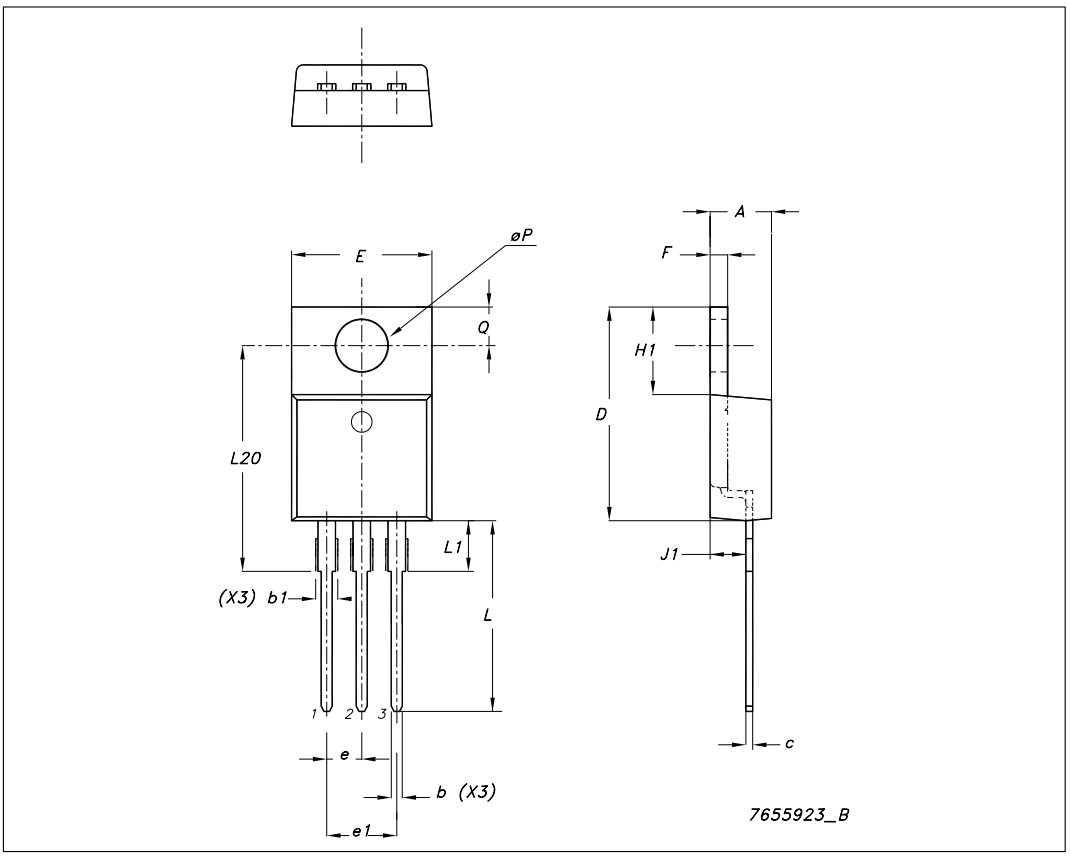

TO-220FP mechanical data

Dim.	mm		
	Min.	Typ.	Max.
A	4.4		4.6
B	2.5		2.7
D	2.5		2.75
E	0.45		0.7
F	0.75		1
F1	1.15		1.70
F2	1.15		1.5
G	4.95		5.2
G1	2.4		2.7
H	10		10.4
L2		16	
L3	28.6		30.6
L4	9.8		10.6
L5	2.9		3.6
L6	15.9		16.4
L7	9		9.3
Dia	3		3.2

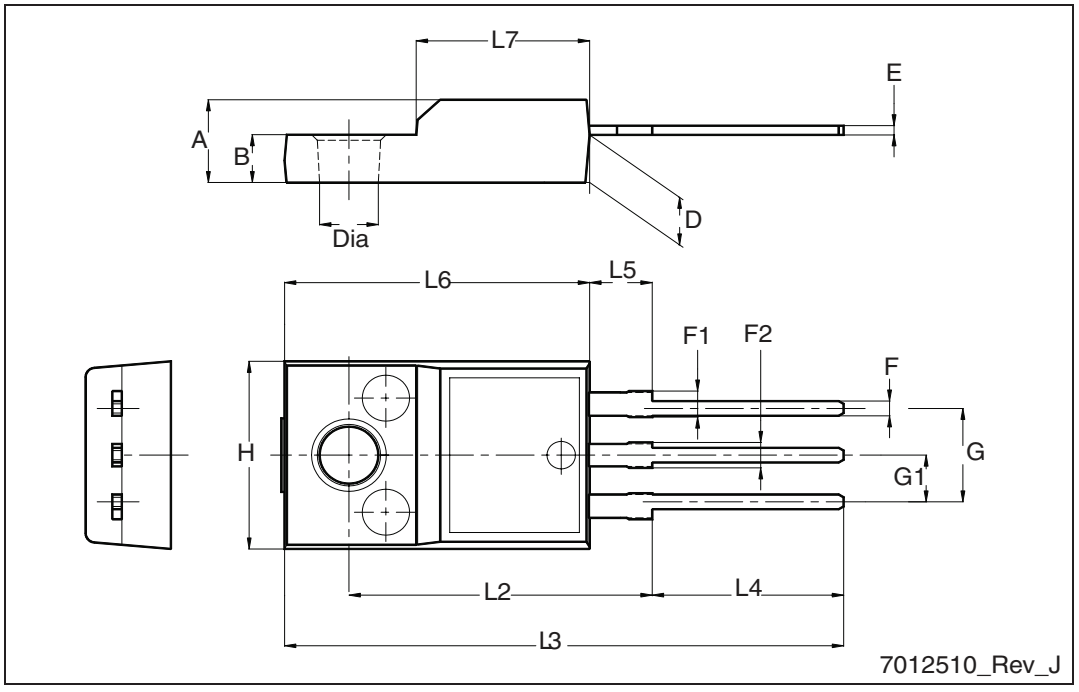

TO-252 (DPAK) mechanical data

DIM.	mm.		
	min.	typ	max.
A	2.20		2.40
A1	0.90		1.10
A2	0.03		0.23
b	0.64		0.90
b4	5.20		5.40
c	0.45		0.60
c2	0.48		0.60
D	6.00		6.20
D1		5.10	
E	6.40		6.60
E1		4.70	
e		2.28	
e1	4.40		4.60
H	9.35		10.10
L	1		
L1		2.80	
L2		0.80	
L4	0.60		1
R		0.20	
V2	0 °		8 °

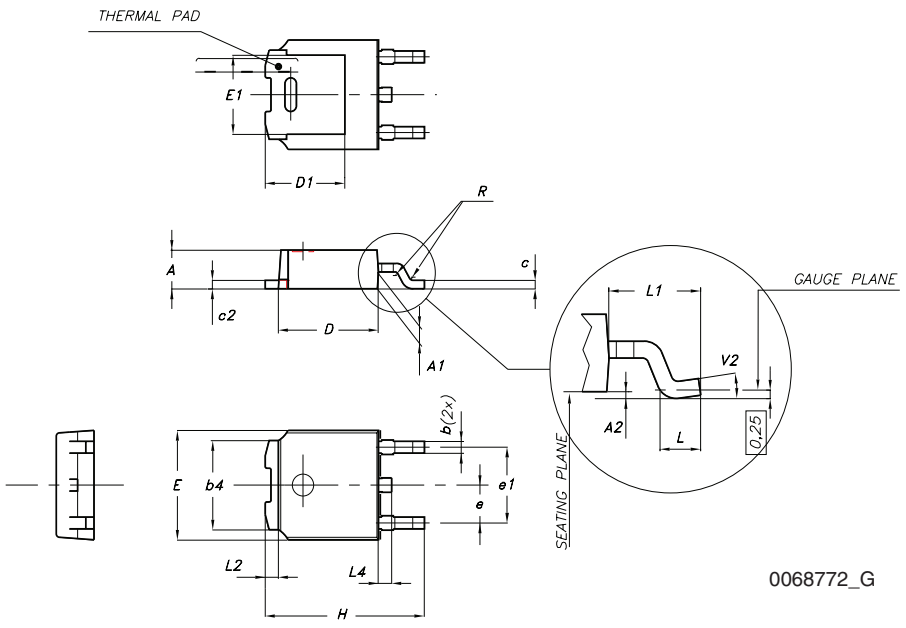

5 Revision history

Table 5. Document revision history

Date	Revision	Changes
04-Oct-2007	1	First release
14-Feb-2008	2	Updated TO-220, type E, mechanical data
01-Oct-2009	3	Updated: collector and base current values *Table 2 on page 3*, $V_{CE(sat)}$ maximum values *Table 4 on page 4*.

Please Read Carefully:

Information in this document is provided solely in connection with ST products. STMicroelectronics NV and its subsidiaries (“ST”) reserve the right to make changes, corrections, modifications or improvements, to this document, and the products and services described herein at any time, without notice.

All ST products are sold pursuant to ST’s terms and conditions of sale.

Purchasers are solely responsible for the choice, selection and use of the ST products and services described herein, and ST assumes no liability whatsoever relating to the choice, selection or use of the ST products and services described herein.

No license, express or implied, by estoppel or otherwise, to any intellectual property rights is granted under this document. If any part of this document refers to any third party products or services it shall not be deemed a license grant by ST for the use of such third party products or services, or any intellectual property contained therein or considered as a warranty covering the use in any manner whatsoever of such third party products or services or any intellectual property contained therein.

UNLESS OTHERWISE SET FORTH IN ST’S TERMS AND CONDITIONS OF SALE ST DISCLAIMS ANY EXPRESS OR IMPLIED WARRANTY WITH RESPECT TO THE USE AND/OR SALE OF ST PRODUCTS INCLUDING WITHOUT LIMITATION IMPLIED WARRANTIES OF MERCHANTABILITY, FITNESS FOR A PARTICULAR PURPOSE (AND THEIR EQUIVALENTS UNDER THE LAWS OF ANY JURISDICTION), OR INFRINGEMENT OF ANY PATENT, COPYRIGHT OR OTHER INTELLECTUAL PROPERTY RIGHT.

UNLESS EXPRESSLY APPROVED IN WRITING BY AN AUTHORIZED ST REPRESENTATIVE, ST PRODUCTS ARE NOT RECOMMENDED, AUTHORIZED OR WARRANTED FOR USE IN MILITARY, AIR CRAFT, SPACE, LIFE SAVING, OR LIFE SUSTAINING APPLICATIONS, NOR IN PRODUCTS OR SYSTEMS WHERE FAILURE OR MALFUNCTION MAY RESULT IN PERSONAL INJURY, DEATH, OR SEVERE PROPERTY OR ENVIRONMENTAL DAMAGE. ST PRODUCTS WHICH ARE NOT SPECIFIED AS "AUTOMOTIVE GRADE" MAY ONLY BE USED IN AUTOMOTIVE APPLICATIONS AT USER’S OWN RISK.

Resale of ST products with provisions different from the statements and/or technical features set forth in this document shall immediately void any warranty granted by ST for the ST product or service described herein and shall not create or extend in any manner whatsoever, any liability of ST.

ST and the ST logo are trademarks or registered trademarks of ST in various countries.

Information in this document supersedes and replaces all information previously supplied.

The ST logo is a registered trademark of STMicroelectronics. All other names are the property of their respective owners.

© 2009 STMicroelectronics - All rights reserved

STMicroelectronics group of companies

Australia - Belgium - Brazil - Canada - China - Czech Republic - Finland - France - Germany - Hong Kong - India - Israel - Italy - Japan - Malaysia - Malta - Morocco - Philippines - Singapore - Spain - Sweden - Switzerland - United Kingdom - United States of America

www.st.com